JA5065-01
(http://www.atseries.net/PDFs/JA5065-01.pdf)

Operating Instructions

BEST BATTERY SELECTOR (p/n EJ5144-####)
for Dual Charger/Battery DC System

for legacy BBS product (manufactured prior to 02.2026) see JA5065-00

DESCRIPTION

- Industrial applications which require redundant dc power to one (1) ***critical*** load, often consist of two (2) charger / battery sets. When the two (2) systems are tied to a single load, use of the **Best Battery Selector** (BBS) prevents current from flowing from one dc set (charger/battery) to the other. The diodes "***steer***" the current from the best dc set to the load.
- This assembly is sometimes referred to as "***steering diodes***", or even "***auctioneering diodes***".
- No switching is done. Therefore, the complete system is very reliable.
- The Best Battery Selector allows the user to test, remove, or repair equipment and/or batteries without disturbing the dc load.
- The Best Battery Selector must be rated to the ***maximum*** dc load current expected.
- The Best Battery Selector operates along the positive (+) dc bus. No connections are necessary, nor are they supplied, for the negative (-) bus. Refer to **SYSTEM SCHEMATIC** below.
- There are ***no*** adjustments or calibration of the standard Best Battery Selector.

SYSTEM SCHEMATIC (sample)

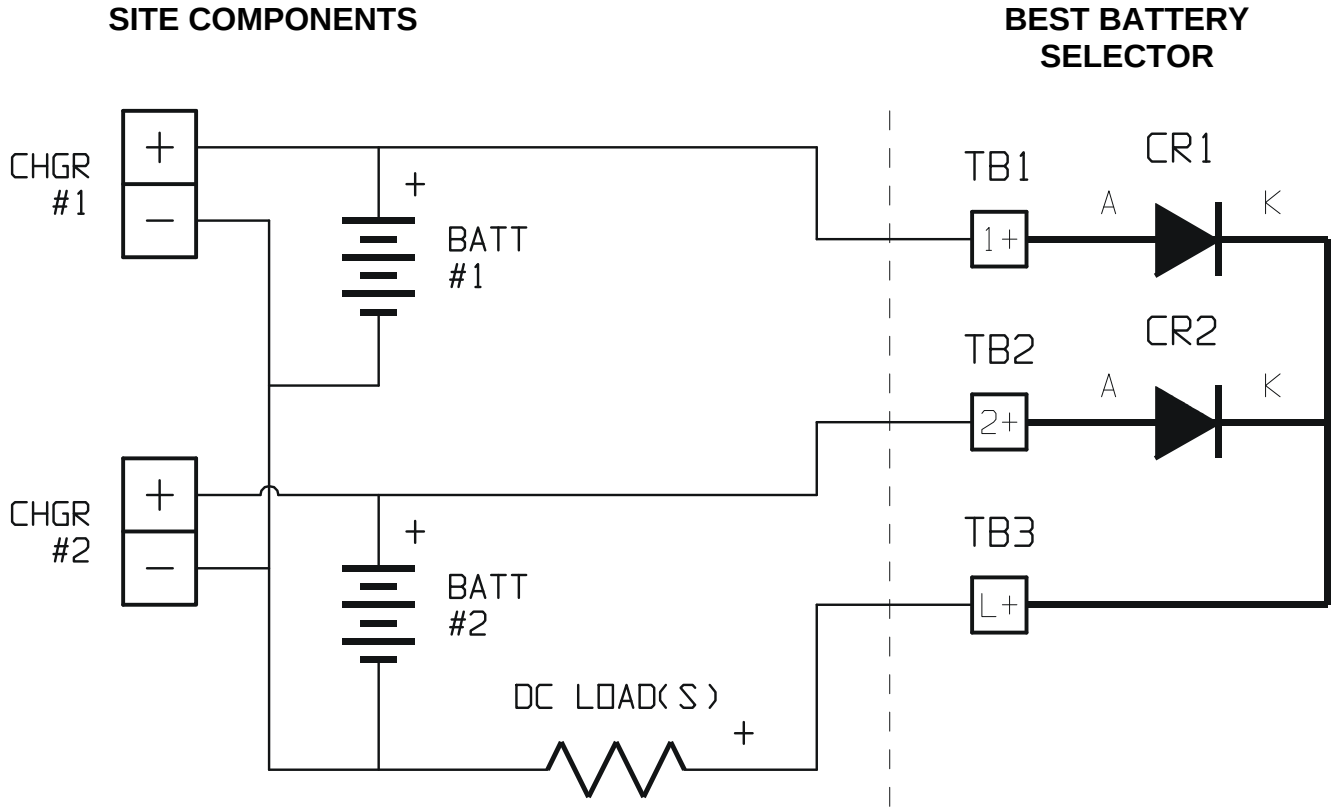

STANDARD DRAWINGS (on www.ATSeries.net/#BBS)

maximum dc output current	50 Adc	100 Adc	200 Adc	500 Adc	750 Adc	1200 Adc
enclosure outline	JE5314-00	JE5314-01	JE5314-02	JE5314-03	JE5138-04	JE5138-05
internal component layout	JE5315-00	JE5315-01	JE5315-02	JE5315-03	JE5139-04	JE5139-05
model number	EJ5144-0050	EJ5144-0100	EJ5144-0200	EJ5144-0500	EJ5144-12	EJ5144-14

INSTALLATION

⚠ CAUTION *Dangerous voltages exist at many points inside the enclosure. When performing tasks inside the BBS, be sure to disconnect all input power sources, and lock out breakers and/or safety switches. After dc inputs have been disconnected, wait a minute for charger capacitors to discharge to safe levels before performing internal work. Heatsinks, bus bars, and wire terminals also carry high temperatures. Use extreme care when working inside the Best Battery Selectors. Wear safety gloves while performing this procedure.*

MOUNTING

- Refer to enclosure outline drawings in the table on Sheet 1 of 2.
- For easiest cable connection, locate a surface near the dc load distribution, or near the charger/batteries.
- The wall or floor mounting surface should be solid, dry, and capable of supporting the weight of the BBS.
- Use 1/4in or 5/16in hardware to wall-mount the enclosure, using the enclosure keyhole slots.
- Use 1/4in or 3/8in hardware to floor-mount larger enclosures, using the bottom mounting holes.
- Standard pre-fab conduit knockouts are provided on the side of the enclosure.
- However, the top or bottom surfaces of the unit can also be used if required.
- The enclosure should be field-modified as needed.

USER ELECTRICAL CONNECTIONS

- Refer to internal component layout drawings in the table on Sheet 1 of 2.
- Only qualified technicians should perform dc power wiring to and from the Best Battery Selector.
- **⚠ CAUTION** All BBS external wiring should conform to the NEC, local, site, and company codes.
- Power wiring connected to the Best Battery Selector user terminals must be rated for the ***full*** dc load current.
- Refer to the System Schematic on Sheet 1 of 2.
- Connect the positive (+) terminal(s) of the ***first*** charger/battery set to **TB1** of the Best Battery Selector.
- Connect the positive (+) terminal(s) of the ***second*** charger/battery set to **TB2** of the Best Battery Selector.
- Connect the positive (+) ***common*** dc load connection to **TB3** of the Best Battery Selector.
- Properly labeled BBS chassis ***and*** door ***ground*** connections are supplied with ZPS stud hardware.

External to the Best Battery Selector

- Connect the negative (-) terminals of the chargers, battery, and dc load(s) together to a common bus.

  NOTICE Although not required, negative (-) dc bus connections ***may*** pass "through" the Best Battery Selector enclosure (if possible).

- Make sure any negative (-) connections are properly isolated from all positive (+) BBS components.
- If available, use external dc disconnects within this circuit leg.

SITE TESTING

- Make sure Best Battery Selector is properly installed along the dc bus. See schematic on Page 1 of 2.
- Place CHARGER #1 (on battery #1) into ***Equalize*** mode. Leave CHARGER #2 in Float mode.
- Current should ***only*** flow from charger/battery paring #1 into BBS TB1(+).
- Voltage on charger/battery paring #2 should not rise to CHARGER #1's equalize voltage.
- Return CHARGER #1 to Float mode. Place CHARGER #2 (on battery #2) into ***Equalize*** mode.
- Current should ***only*** flow from charger/battery paring #2 into BBS TB2(+).
- Voltage on charger/battery paring #1 should not rise to CHARGER #2's equalize voltage.
- Return CHARGER #2 to Float mode.