| PART No. | VOLTAGE RATING | CURRENT RATING |
|---|---|---|
| EJ5144-0500 | 600 VDC | 500 ADC |

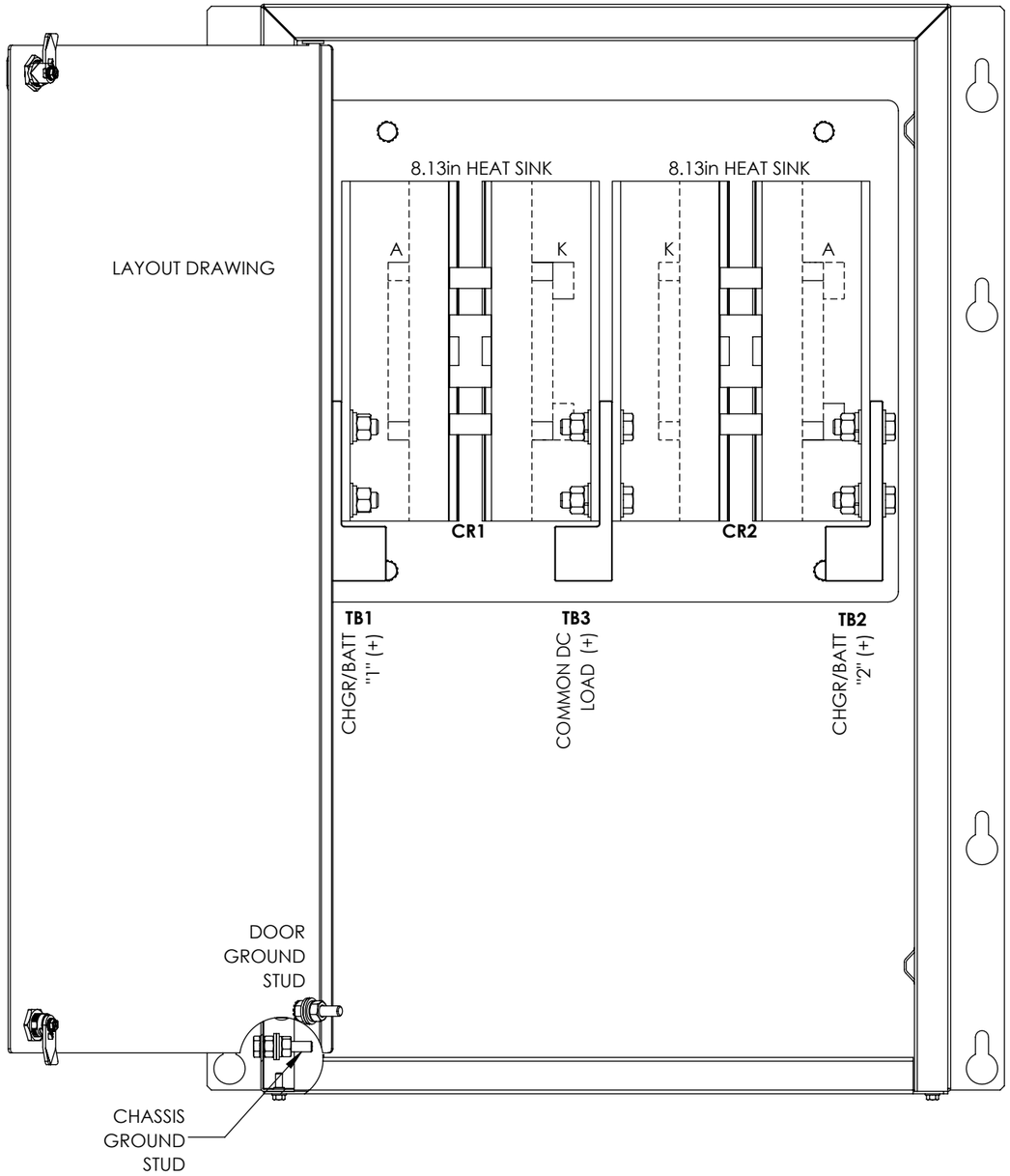


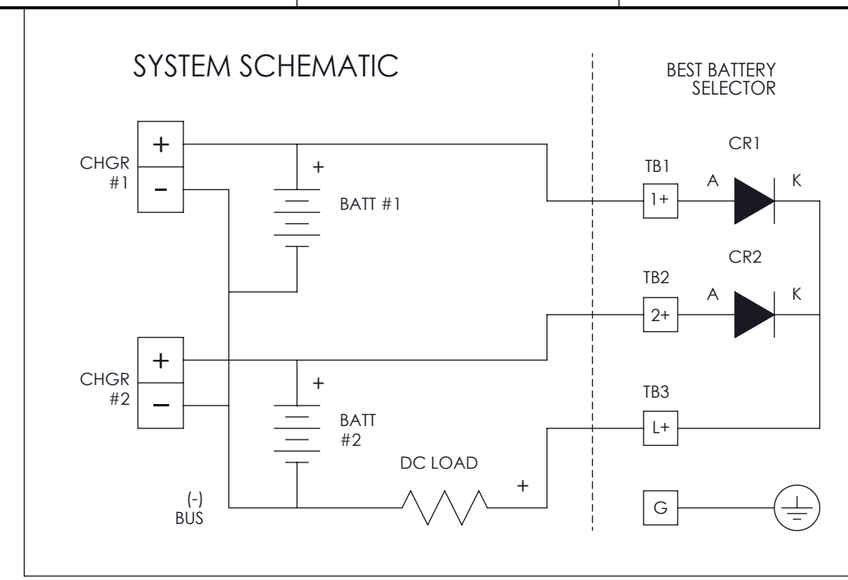


NOTES:

1. STEERING DIODES AND I/O TERMINALS (TB1/TB2/TB3) FEATURE HARD-BOLT CONNECTIONS
2. NO NEGATIVE (-) DC POWER CONNECTION LUGS SUPPLIED (NOR REQUIRED) IN STEERING DIODE ASSEMBLY (ON BUS+)
3. STEERING DIODES LINK TWO (2) BATTERY CHARGER DC OUTPUT BUSES TO COMMON LOAD WITHOUT LINKING BATTERY BANKS TOGETHER, SEE OPERATING INSTRUCTIONS (JA5065-01)

| I/O TERMINAL | DESCRIPTION - TYPE | CONNECTION |
|---|---|---|
| TB1 | CHGR/BATT #1 INPUT TERMINAL - CU-AL COMPRESSION LUG | TWO (2) #6-350 MCM |
| TB2 | CHGR/BATT #2 INPUT TERMINAL - CU-AL COMPRESSION LUG | TWO (2) #6-350 MCM |
| TB3 | COMMON LOAD OUTPUT TERMINAL - CU-AL COMPRESSION LUG | TWO (2) #6-350 MCM |
| CHS GND | CHASSIS GROUND TERMINAL - 1/4-20 ZPS STUD HARDWARE | 1/4in RING LUG |

| REV. | DRN BY | CHK BY | APP BY | DATE |
|---|---|---|---|---|
| 0 | | | | 2/12/2026 |

DESCRIPTION: Initial Release

| | | |
|---|---|---|
| DRN BY | KJE | DATE: 12/8/2025 |
| CHK BY | KJE | DATE: 2/12/2026 |
| APP BY | KJE | DATE: 2/12/2026 |

UNLESS OTHERWISE SPECIFIED ALL DIMENSIONS FOLLOW THE ANSI SYSTEM IPS (INCHES-POUNDS & SECONDS) TOLERANCES ARE: FRAC. ±1/64, DEC. ±.015, ang ±.25°

TITLE: BEST BATTERY SELECTOR INTERNAL LAYOUT: NEMA-1 STYLE-5067 ENCLOSURE (500A)

| | SCALE | DWG No | REV | SHEET |
|---|---|---|---|---|
| B | 1:3.5 | JE5315-03 | 0 | 1 OF 1 |