PART No.	VOLTAGE RATING	CURRENT RATING
EJ5144-0500	600 VDC	500 ADC

FRONT VIEW

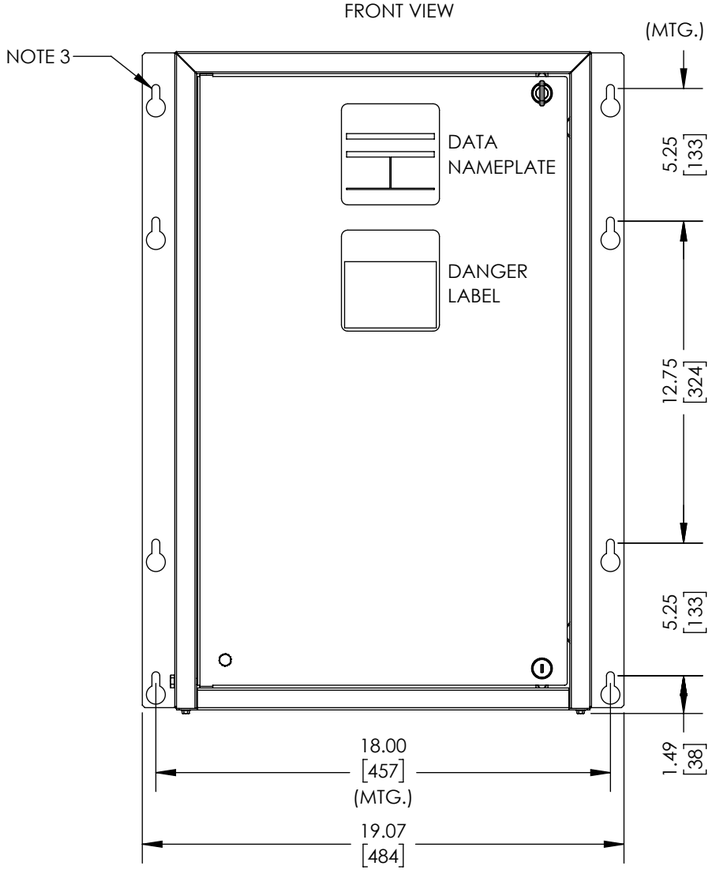

SIDE VIEW

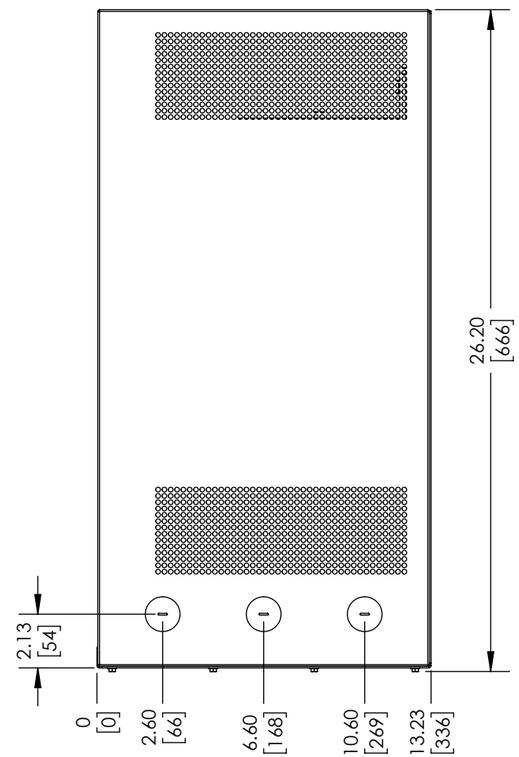

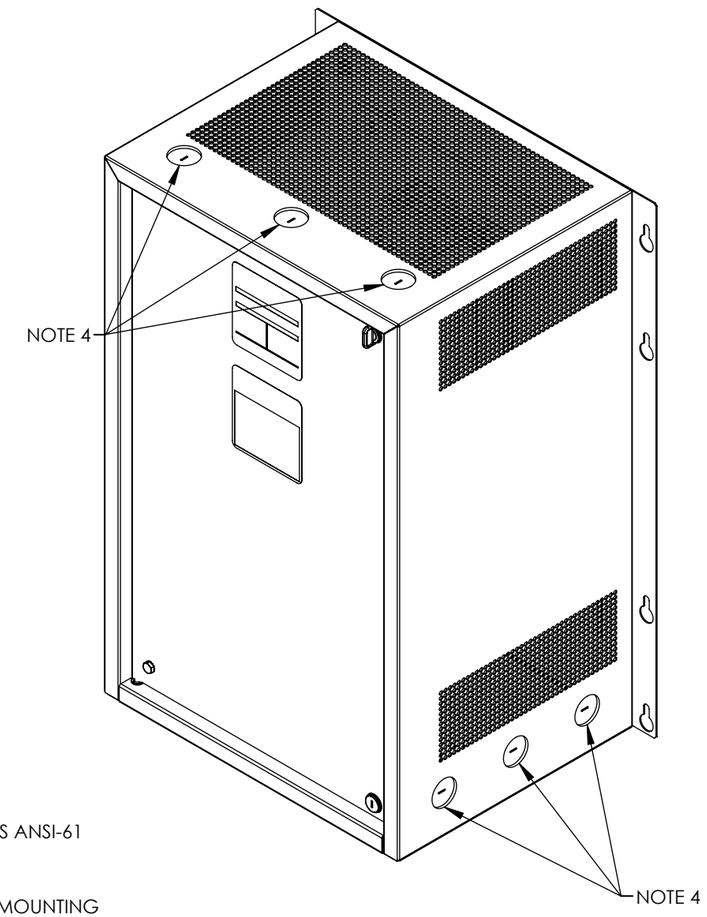

BOTTOM VIEW

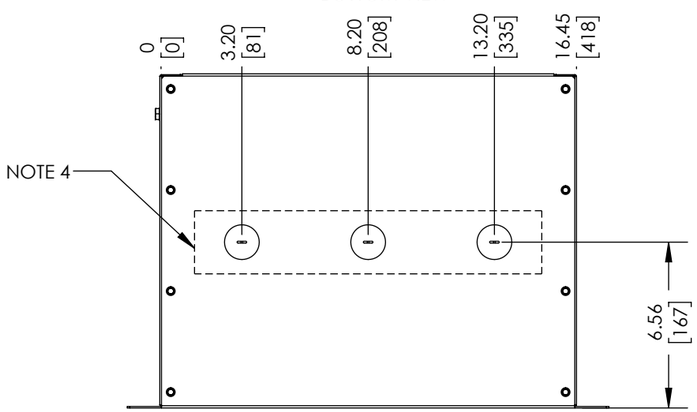

NOTES:

1. ENCLOSURE IS A NEMA TYPE 1 / IP20 TOP-VENTED STEEL CABINET WITHOUT GASKETS. FINISH IS ANSI-61 GRAY EPOXY POWDERCOAT.
2. ALLOW 6in / 152mm OF FREE AIR ON ALL VENTED SURFACES FOR COOLING.
3. FOUR (4) KEY-HOLE SLOTS ARE PROVIDED ON BACK OF ENCLOSURE AS SHOWN, FOR WALL-MOUNTING WITH 0.25in / 6.25mm HARDWARE.
4. NINE (9) 1.31in / 33mm DIA KNOCKOUTS ARE PROVIDED AS SHOWN. USE OF ANY OF THREE (3) LOWER CONDUIT KNOCKOUTS WILL ALLOW REMOVAL OF CABINET SHROUD WITHOUT REMOVAL OF EXTERNAL WIRING.
5. BEST BATTERY SELECTOR SHIPPING WEIGHT: APPROXIMATELY 180 lb / 82 kg

DUAL DIMENSIONS in [mm]

REV.	DRN BY	CHK BY	APP BY	DATE	DRN BY	DATE:	
0				2/12/2026	KJE	12/8/2025	
DESCRIPTION: Initial Release					CHK BY KJE	DATE: 2/12/2026	
					APP BY KJE	DATE: 2/12/2026	TITLE

UNLESS OTHERWISE SPECIFIED ALL DIMENSIONS FOLLOW THE ANSI SYSTEM IPS (INCHES-POUNDS & SECONDS) TOLERANCES ARE: FRAC. ±1/64, DEC. ±.015, ang ±.25°

TITLE: BEST BATTERY SELECTOR OUTLINE: NEMA-1 STYLE-5067 ENCLOSURE (500A)

B	SCALE 1:6	DWG No JE5314-03	REV 0	SHEET 1 OF 1